Electronic Alliance

AC TUBE AXIAL FANS.

GENERAL DATA FOR TUBE AXIAL FANS:

Frame / Housing	:	Aluminium die-casting
Impeller	:	Plastic PBT PC, Nylon or metal
Bearing System	:	Ball bearing or sleeve Bearing
Motor	:	Shaded pole or capacitor induction
Connection	:	Lead wire or terminal type (as per customer request)
Protection	:	Impendance protection or thermal protection
Insulation Resistance	:	Above 100MΩ, DC500V
Dielectric withstand voltage	:	AC 1500V (50/60Hz) one minute
Operating Temperature	:	Ball bearing: - 40°C~70°C Sleeve Bearing: - 20°C ~ 70°C
Life Expentacy	:	Ball bearing: over 40,000. (At 40°C) Sleeve Bearing: over 15,000. (At 40°C)
Safety Approval	:	UL, CUL, CE

ALL MODELS DISPLAYED ON THIS CATALOGUE ARE ROHS COMPLIANT.

Description of Model No. :

E	A	1890	C	-11	H	B
1	2	3	4	5	6	7

1. E
Electronic Associates

2. A
AC Fans

3. Size.

25107	:	254	x	254	x	107	mm
2589	:	254	x	254	x	89	mm
1890	:	180	x	180	x	90	mm
1751	:	172	x	172	x	51	mm
1555	:	172	x	150	x	55	mm
1551	:	172	x	150	x	51	mm
1538	:	172	x	150	x	38	mm
1662	:	160	x	160	x	62	mm
1338	:	127	x	127	x	38	mm
1238	:	120	x	120	x	38	mm
1225	:	120	x	120	x	25	mm
9238	:	92	x	92	x	38	mm
9225	:	92	x	92	x	25	mm
8038	:	80	x	80	x	38	mm
8025	:	80	x	80	x	25	mm
6030	:	60	x	60	x	30	mm

4. Special design.

C:	Capacitance Induction Motor
R:	Reverse Air
M:	Metal Impeller
CR:	Capacitance Induction Motor + Reverse Air
MR:	Metal Impeller + Reverse Air
E:	Without Frame
A:	3 Phase

5. Input Voltage.

11:	115V
23:	230V

6. Speed.

H:	High Speed
M:	Medium Speed
L:	Low Speed

7. Bearing.

B: Ball Bearing
S: Sleeve Bearing

Electronic Alliance

AC TUBE AXIAL FANS

MODEL: EA1890C SERIES

SIZE: 180 X 180 X 90 MM

Thermal Protection

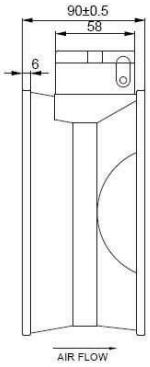

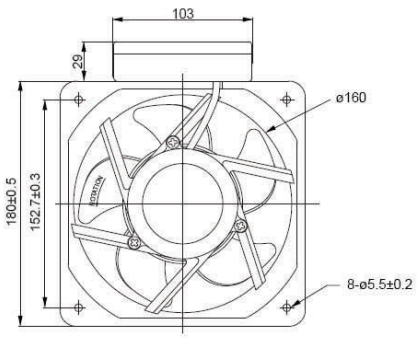

TERMINAL TYPE

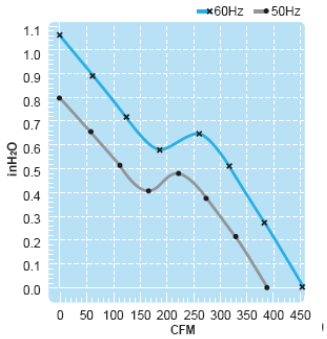

E314708 E314708

Model Spec	Rated Voltage V	Frequency Hz	Input Power W	Rated Current A	Locked Current A	Speed RPM	Maximum Air Flow m³/ min	Maximum Air Flow CFM	Maximum Pressure mmH₂O	Maximum Pressure InchH₂O	Noise dB	Weight KG
EA1890C-11HB	115V	50	78	0.88	2.00	2,850	11.0	390	20.0	0.78	54	2.20
		60	72	0.63	2.01	3,400	13.0	460	27.0	1.06	59	
EA1890C-23HB	230V	50	75	0.42	1.00	2,850	11.0	390	20.0	0.78	54	2.20
		60	72	0.91	1.01	3,400	13.0	460	27.0	1.06	59	

MODEL: EA1662C SERIES

SIZE: 160 X 160 X 62 MM

Thermal Protection

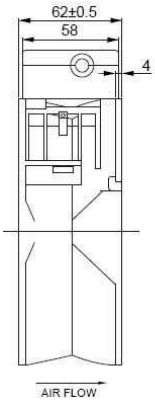

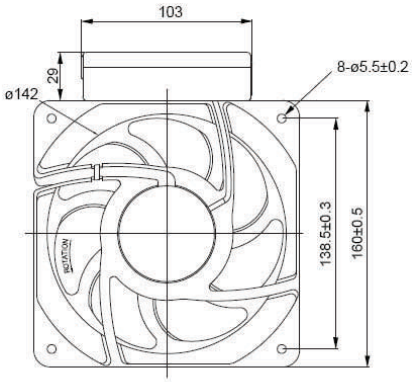

TERMINAL TYPE

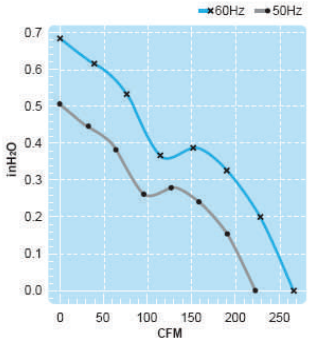

E314708 E314708

Model Spec	Rated Voltage V	Frequency Hz	Input Power W	Rated Current A	Locked Current A	Speed RPM	Maximum Air Flow m³/ min	Maximum Air Flow CFM	Maximum Pressure mmH₂O	Maximum Pressure InchH₂O	Noise dB	Weight KG
EA1662C-11HB	115V	50	46	0.43	0.80	2,850	6.3	222	13.5	0.53	52	1.33
		60	41	0.34	0.79	3,400	7.5	265	18.2	0.72	56	
EA1662C-23HB	230V	50	46	0.22	0.20	2,850	6.3	222	13.5	0.53	52	1.33
		60	41	0.17	0.41	3,400	7.5	265	18.5	0.72	56	

MODEL: EA25107C SERIES

SIZE: 254 X 254 X 107 MM

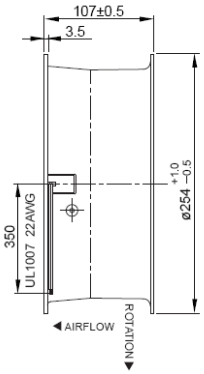

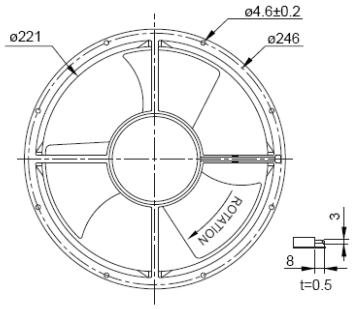

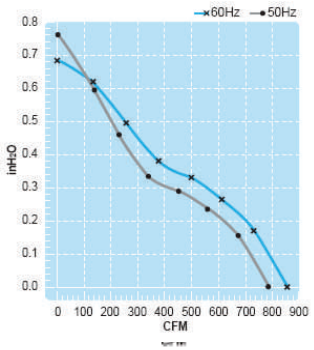

Thermal Protection

Terminal or Lead Wire Type

E314708 E314708

Model Spec	Rated Voltage V	Frequency Hz	Input Power W	Rated Current A	Locked Current A	Speed RPM	Maximum Air Flow m³/ min	Maximum Air Flow CFM	Maximum Pressure mmH₂O	Maximum Pressure InchH₂O	Noise dB	Weight KG
EA25107C-11HB	115V	50	95	0.85	1.65	2,600	22.0	780	19.0	0.75	63	2.50
		60	125	1.07	1.50	2,750	24.0	850	17.5	0.68	65	
EA25107C-23HB	230V	50	95	0.42	0.80	2,600	22.0	780	19.0	0.75	63	2.50
		60	125	0.50	0.75	2,750	24.0	850	17.5	0.68	65	

MODEL: EA2589C SERIES (Avaliable also in Double Voltage)

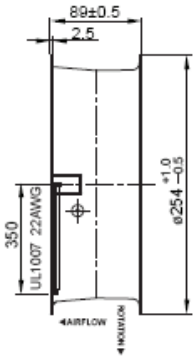

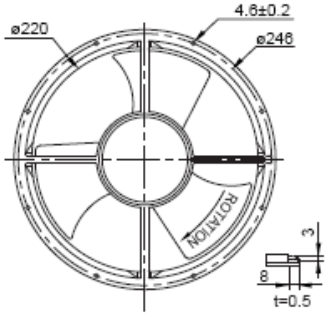

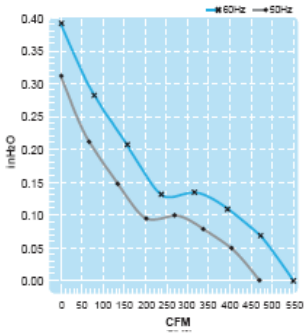

Thermal Protection

Terminal or Lead Wire Type

E314708 E314708

Model Spec	Rated Voltage V	Frequenzy Hz	Input Power W	Rated Current A	Locked Current A	Speed RPM	Maximum Air Flow m³/ min	Maximum Air Flow CFM	Maximum Pressure mmH₂O	Maximum Pressure InchH₂O	Noise dB	Weight KG
EA2589C-11HB	115V	50	31	0.30	0.53	1,400	13.0	460	8.0	0.32	52	1.90
		60	33	0.29	0.51	1,650	15.5	550	10.0	0.40	55	
EA2589C-23HB	230V	50	31	0.14	0.26	1,400	13.0	460	8.0	0.32	52	1.90
		60	33	0.14	0.25	1,650	15.5	550	10.0	0.40	55	

MODEL: EA1751 SERIES

SIZE: 172 X 172 X 51 MM

Impedance Protection

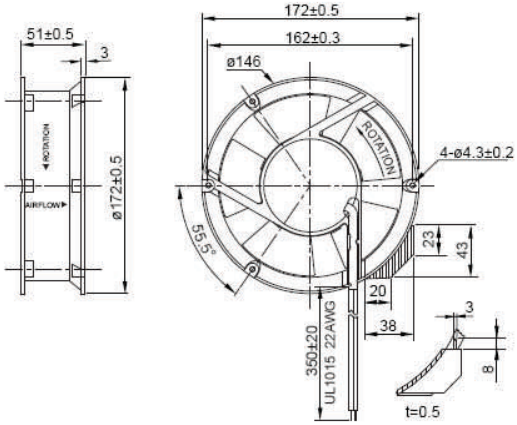

Terminal or Lead Wire Type

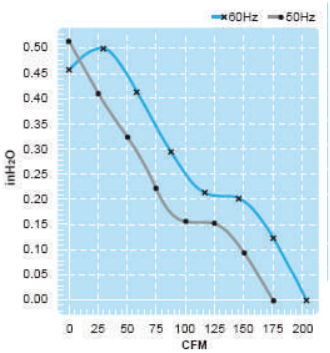

E314708 E314708

Model Spec	Rated Voltage V	Frequency Hz	Input Power W	Rated Current A	Locked Current A	Speed RPM	Maximum Air Flow m³/ min	Maximum Air Flow CFM	Maximum Pressure mmH₂O	Maximum Pressure InchH₂O	Noise dB	Weight KG
EA1751-11HB	115V	50	32	0.43	0.51	2,750	4.8	170	10.5	0.42	49	0.90
		60	28	0.36	0.45	3,100	5.5	195	9.5	0.38	53	
EA1751-23HB	230V	50	35	0.23	0.29	2,750	4.8	170	10.5	0.42	49	0.90
		60	30	0.18	0.25	3,100	5.5	195	9.5	0.38	53	

MODEL: EA1751C SERIES

SIZE: 172 X 172 X 51 MM

Thermal Protection

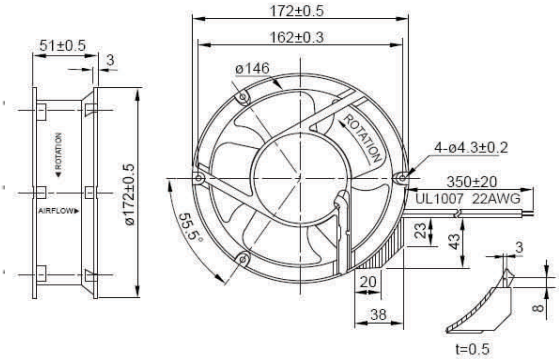

Terminal or Lead Wire Type

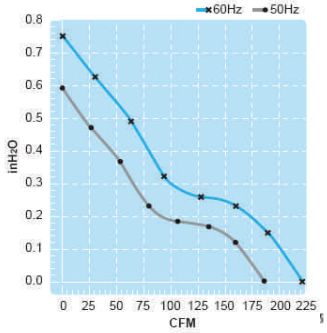

E314708 E314708

Model Spec	Rated Voltage V	Frequency Hz	Input Power W	Rated Current A	Locked Current A	Speed RPM	Maximum Air Flow m³/ min	Maximum Air Flow CFM	Maximum Pressure mmH₂O	Maximum Pressure InchH₂O	Noise dB	Weight KG
EA1751C-11HB	115V	50	31	0.26	0.41	2,850	5.8	205	16.0	0.63	50	0.90
		60	31	0.25	0.43	3,400	6.4	226	20.0	0.79	55	
EA1751C-23HB	230V	50	29	0.12	0.19	2,850	5.8	205	16.0	0.63	50	0.90
		60	29	0.12	0.19	3,400	6.4	226	20.0	0.79	55	
EA1751C-11LB	115V	50	31	0.17	0.21	1,400	2.5	88	3.8	0.15	31	0.90
		60	31	0.15	0.20	1,700	3.0	106	5.5	0.22	37	
EA1751C-23LB	230V	50	29	0.08	0.09	1,400	2.5	88	3.8	0.15	31	0.90
		60	29	0.07	0.09	1,700	3.0	106	5.5	0.22	37	

Electronic Alliance

AC TUBE AXIAL FANS

MODEL: EA1551 SERIES

SIZE: 172 X 150 X 51 MM

Impedance Protection

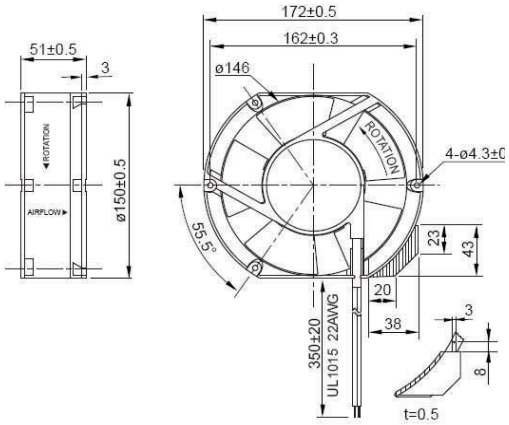

Terminal or Lead Wire Type

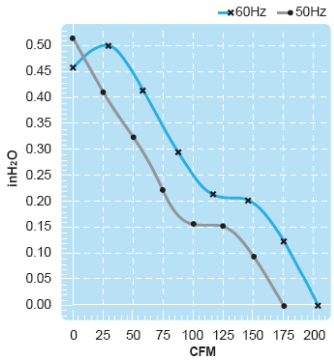

E314708 E314708

Model Spec	Rated Voltage V	Frequenzy Hz	Input Power W	Rated Current A	Locked Current A	Speed RPM	Maximum Air Flow m³/ min	Maximum Air Flow CFM	Maximum Pressure mmH₂O	Maximum Pressure InchH₂O	Noise dB	Weight KG
EA1551-1HB	115V	50	32	0.43	0.51	2,750	4.8	170	10.5	0.42	50	0.90
		60	28	0.36	0.45	3,100	5.5	195	9.5	0.38	55	
EA1551-23HB	230V	50	35	0.23	0.29	2,750	4.8	170	10.5	0.42	50	0.90
		60	30	0.18	0.25	3,100	5.5	195	9.5	0.38	55	

MODEL: EA1551C SERIES (Available also in Double

Thermal Protection

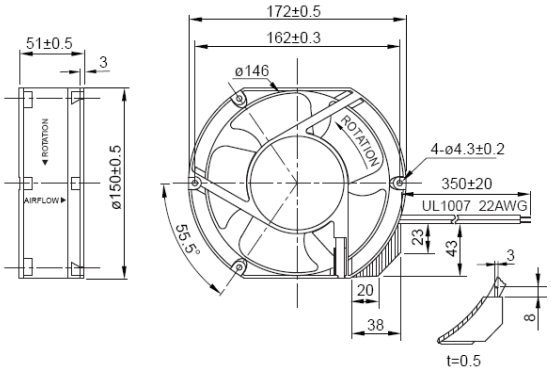

Terminal or Lead Wire Type

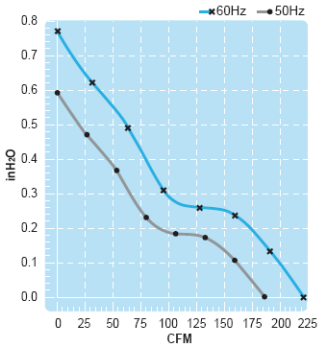

E314708 E314708

Model Spec	Rated Voltage V	Frequency Hz	Input Power W	Rated Current A	Locked Current A	Speed RPM	Maximum Air Flow m³/ min	Maximum Air Flow CFM	Maximum Pressure mmH₂O	Maximum Pressure InchH₂O	Noise dB	Weight KG
EA1551C-11HB	115V	50	31	0.26	0.41	2,850	5.8	205	16.0	0.63	53	0.90
		60	31	0.25	0.43	3,400	6.4	226	20.0	0.79	58	
EA1551C-23HB	230V	50	29	0.12	0.19	2,850	5.8	205	16.0	0.63	53	0.90
		60	29	0.12	0.19	3,400	6.4	226	20.0	0.79	58	
EA1551C-11LB	115V	50	31	0.17	0.21	1,400	2.5	88	3.8	0.15	31	0.90
		60	31	0.15	0.20	1,700	3.0	106	5.5	0.22	37	
EA1551C-23LB	230V	50	29	0.08	0.09	1,400	2.5	88	3.8	0.15	31	0.90
		60	29	0.07	0.09	1,700	3.0	106	5.5	0.22	37	

Electronic Alliance

AC TUBE AXIAL FANS

MODEL: EA1555C SERIES

SIZE: 172 X 150 X 55 MM

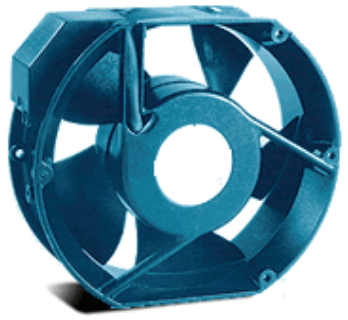

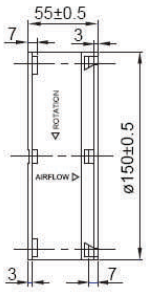

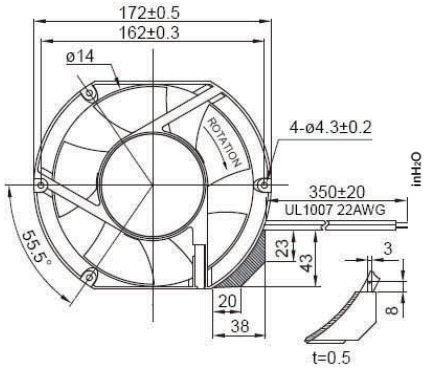

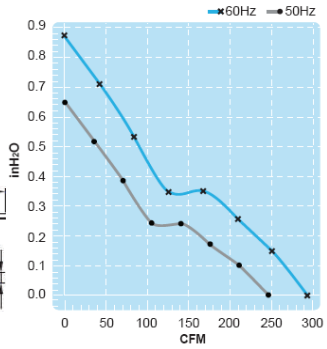

Thermal Protection

Terminal or Lead Wire Type

E314708 E314708

Model Spec	Rated Voltage V	Frequenzy Hz	Input Power W	Rated Current A	Locked Current A	Speed RPM	Maximum Air Flow m³/ min	Maximum Air Flow CFM	Maximum Pressure mmH₂O	Maximum Pressure InchH₂O	Noise dB	Weight KG
EA1555C-11HB	115V	50	39	0.38	0.75	2,900	6.8	240	17.0	0.67	55	1.05
		60	38	0.34	0.76	3,400	8.3	293	23.0	0.90	60	
EA1555C-23HB	230V	50	38	0.18	0.38	2,900	6.8	240	17.0	0.67	55	1.05
		60	38	0.17	0.38	3,400	8.3	293	23.0	0.90	60	

MODEL: EA1555CR SERIES

SIZE: 172 X 150 X 55 MM

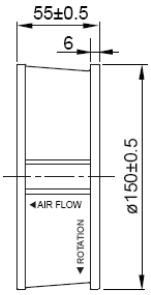

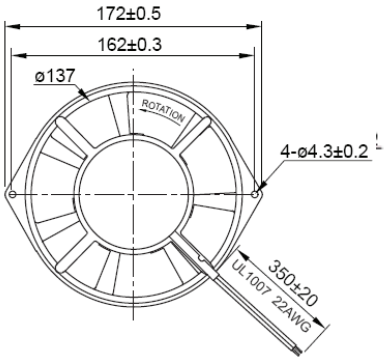

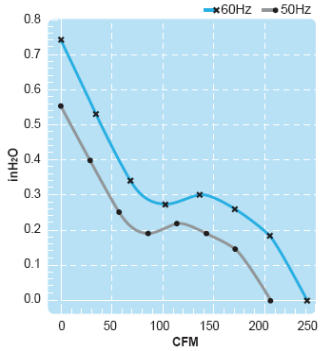

Thermal Protection

Lead Wire Type

E314708 E314708

Model Spec	Rated Voltage V	Frequency Hz	Input Power W	Rated Current A	Locked Current A	Speed RPM	Maximum Air Flow m³/ min	Maximum Air Flow CFM	Maximum Pressure mmH₂O	Maximum Pressure InchH₂O	Noise dB	Weight KG
EA1555CR-11HB	115V	50	26	0.24	0.58	2,850	5.8	205	14.0	0.55	61	1.08
		60	30	0.25	0.58	3,400	6.8	241	18.5	0.73	66	
EA1555CR-23HB	230V	50	26	0.11	0.28	2,850	5.8	205	14.0	0.55	61	1.08
		60	31	0.13	0.28	3,400	6.8	241	18.5	0.73	66	

MODEL: EA1555M SERIES (Avaliable also in Double

* Metal Impeller

Thermal Protection

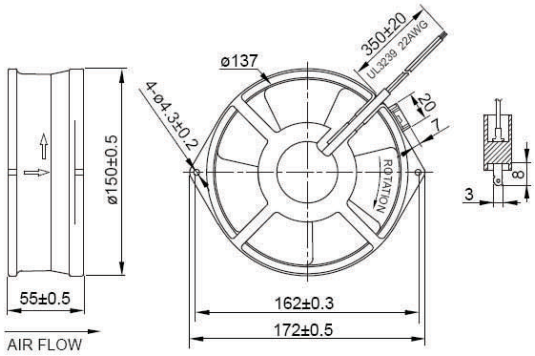

Terminal or Lead Wire Type

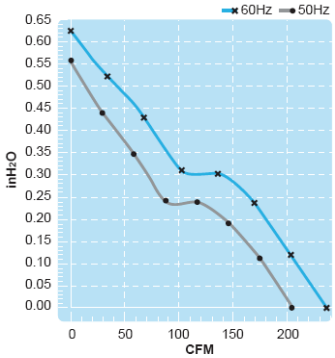

E314708 E314708

Model Spec	Rated Voltage V	Frequency Hz	Input Power W	Rated Current A	Locked Current A	Speed RPM	Maximum Air Flow m³/ min	Maximum Air Flow CFM	Maximum Pressure mmH₂O	Maximum Pressure InchH₂O	Noise dB	Weight KG
EA1555M-11HB	115V	50	42	0.52	0.88	2,800	5.5	195	14.0	0.55	49	1.10
		60	42	0.47	0.75	3,250	6.5	230	16.0	0.63	53	
EA1555M-23HB	230V	50	42	0.25	0.43	2,800	5.5	195	14.0	0.55	49	1.10
		60	42	0.23	0.37	3,250	6.5	230	16.0	0.63	53	

MODEL: EA1555MR SERIES

SIZE: 172 X 150 X 55 MM

* Metal Impeller

Thermal Protection

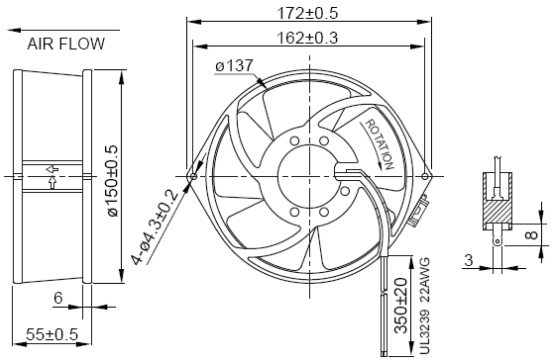

Terminal or Lead Wire Type

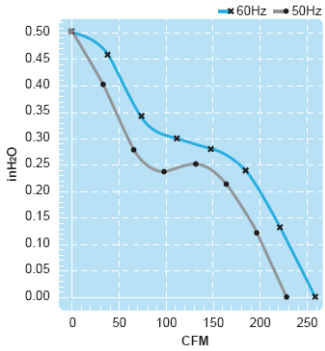

E314708 E314708

Model Spec	Rated Voltage V	Frequency Hz	Input Power W	Rated Current A	Locked Current A	Speed RPM	Maximum Air Flow m³/ min	Maximum Air Flow CFM	Maximum Pressure mmH₂O	Maximum Pressure InchH₂O	Noise dB	Weight KG
EA1555MR-11HB	115V	50	45	0.54	0.90	2,750	6.4	225	12.5	0.50	58	1.10
		60	45	0.51	0.80	3,150	7.2	255	12.5	0.50	61	
EA1555MR-23HB	230V	50	45	0.27	0.44	2,750	6.4	225	12.5	0.50	58	1.10
		60	45	0.25	0.38	3,150	7.2	255	12.5	0.50	61	

Electronic Alliance

AC TUBE AXIAL FANS

MODEL: EA1538C SERIES
SIZE: 172 X 150 X 38 MM

Thermal Protection

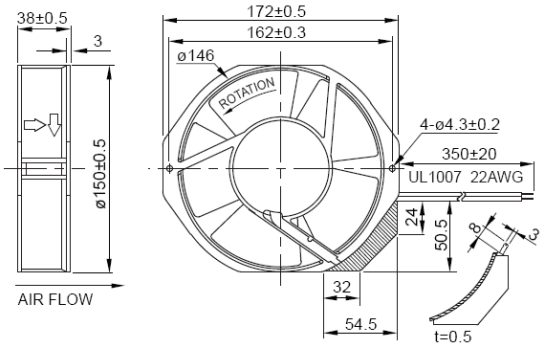

Terminal or Lead Wire Type

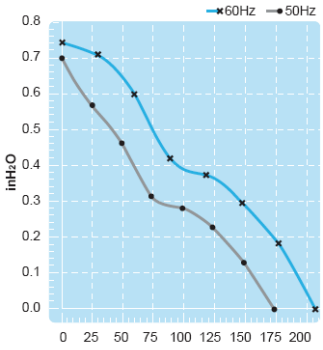

E314708 E314708

Model Spec	Rated Voltage V	Frequency Hz	Input Power W	Rated Current A	Locked Current A	Speed RPM	Maximum Air Flow m³/ min	Maximum Air Flow CFM	Maximum Pressure mmH₂O	Maximum Pressure InchH₂O	Noise dB	Weight KG
EA1538C-11HB	115V	50	29	0.25	0.36	2,850	5.0	177	17.0	0.67	54	0.72
		60	28	0.23	0.38	3,400	6.0	212	19.0	0.75	58	
EA1538C-23HB	230V	50	27	0.11	0.18	2,850	5.0	177	17.0	0.67	54	0.72
		60	26	0.11	0.18	3,400	6.0	212	19.0	0.75	58	
EA1538C-11LB	115V	50	29	0.17	0.20	1,400	2.4	85	4.5	0.18	38	0.72
		60	28	0.15	0.20	1,700	2.9	103	6.5	0.26	44	
EA1538C-23LB	230V	50	27	0.08	0.10	1,400	2.4	85	4.5	0.18	38	0.72
		60	26	0.07	0.10	1,700	2.9	103	6.5	0.26	44	

MODEL: EA1538 SERIES
SIZE: 172 X 150 X 38 MM

Impedance Protection

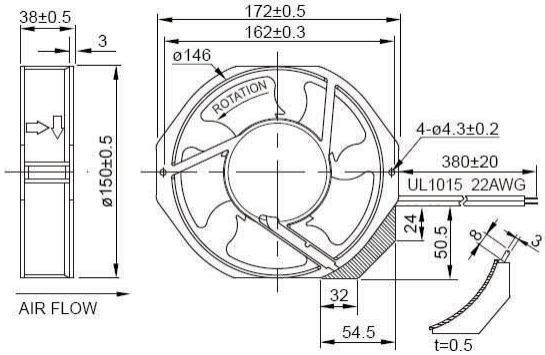

Terminal or Lead Wire Type

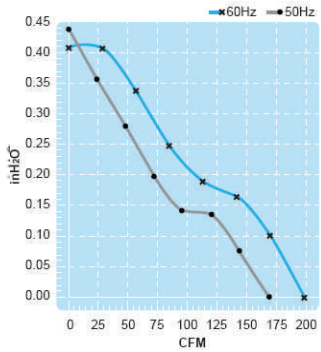

Model Spec	Rated Voltage V	Frequency Hz	Input Power W	Rated Current A	Locked Current A	Speed RPM	Maximum Air Flow m³/ min	Maximum Air Flow CFM	Maximum Pressure mmH₂O	Maximum Pressure InchH₂O	Noise dB	Weight KG
EA1538-11HB	115V	50	36	0.50	0.66	2,750	4.7	166	11.0	0.43	50	0.78
		60	30	0.38	0.56	3,200	5.6	198	10.0	0.40	55	
EA1538-23HB	230V	50	37	0.25	0.32	2,750	4.7	166	11.0	0.43	50	0.78
		60	31	0.19	0.28	3,200	5.6	198	10.0	0.40	55	

Electronic Alliance

AC TUBE AXIAL FANS

MODEL: EA1338 SERIES
SIZE: 127 X 127 X 38 MM

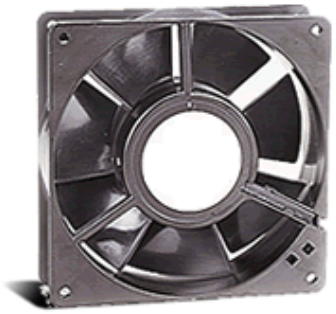

Impedance Protection

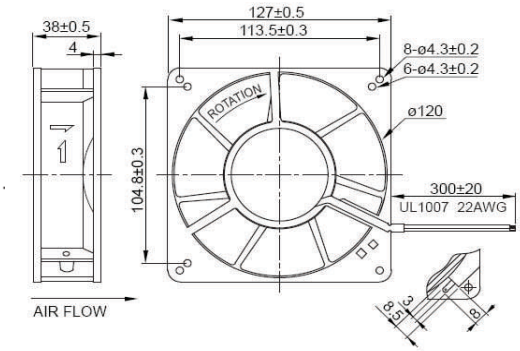

Terminal or Lead Wire Type

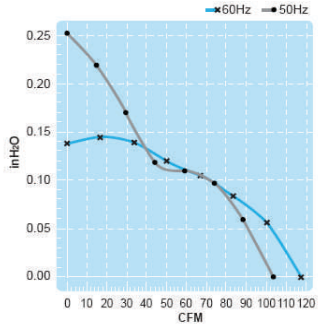

E314708 E314708

Model Spec	Rated Voltage V	Frequency Hz	Input Power W	Rated Current A	Locked Current A	Speed RPM	Maximum Air Flow m³/ min	Maximum Air Flow CFM	Maximum Pressure mmH₂O	Maximum Pressure InchH₂O	Noise dB	Weight KG
EA1338-11HB	115V	50	14	0.20	0.26	2,700	2.9	103	7.3	0.29	46	0.55
		60	12	0.16	0.23	3,000	3.4	120	2.8	0.11	50	
EA1338-23HB	230V	50	17	0.10	0.13	2,700	2.9	103	7.3	0.29	46	0.55
		60	15	0.09	0.11	3,000	3.4	120	2.8	0.11	50	

MODEL: EA1238R SERIES
SIZE: 120 X 120 X 38 MM

* Reverse Air Flow

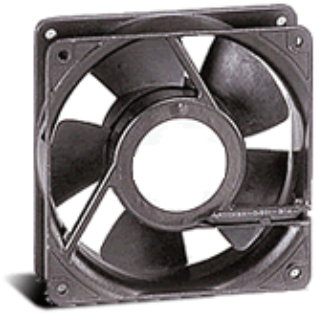

Impedance Protection

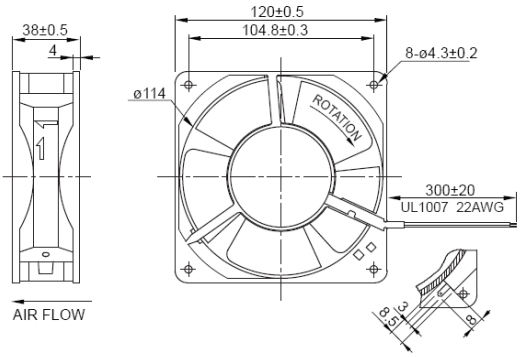

Terminal or Lead Wire Type

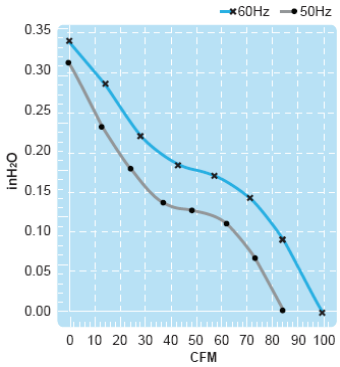

E314708 E314708

Model Spec	Rated Voltage V	Frequency Hz	Input Power W	Rated Current A	Locked Current A	Speed RPM	Maximum Air Flow m³/ min	Maximum Air Flow CFM	Maximum Pressure mmH₂O	Maximum Pressure InchH₂O	Noise dB	Weight KG
EA1238R-11HB	115V	50	13	0.20	0.22	2,700	2.4	85	8.0	0.32	75	0.53
		60	11	0.19	0.20	3,100	2.8	99	8.5	0.33	47	
EA1238R-23HB	230V	50	17	0.10	0.11	2,700	2.4	85	8.0	0.32	45	0.53
		60	15	0.09	0.10	3,100	2.8	99	8.5	0.33	47	
EA1238R-11MB	115V	50	13	0.18	0.20	2,500	2.2	78	6.0	0.24	43	0.53
		60	11	0.17	0.19	2,750	2.4	85	6.5	0.26	45	
EA1238R-23MB	230V	50	17	0.09	0.10	2,500	2.2	78	6.0	0.24	43	0.53
		60	15	0.08	0.09	2,750	2.4	85	6.5	0.26	45	
EA1238R-11LB	115V	50	13	0.16	0.18	2,100	1.9	67	3.8	0.15	36	0.53
		60	11	0.15	0.16	2,300	2.1	75	4.0	0.16	38	
EA1238R-23LB	230V	50	17	0.08	0.09	2,100	1.9	67	3.8	0.15	36	0.53
		60	15	0.07	0.08	2,300	2.1	75	4.0	0.16	38	

Electronic Alliance

AC TUBE AXIAL FANS

MODEL: EA1238 SERIES

SIZE: 120 X 120 X 38 MM

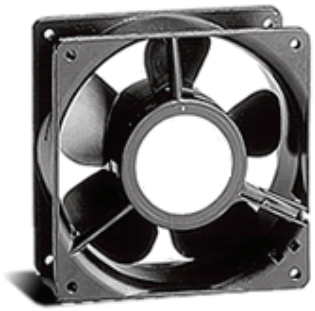

Impedance Protection

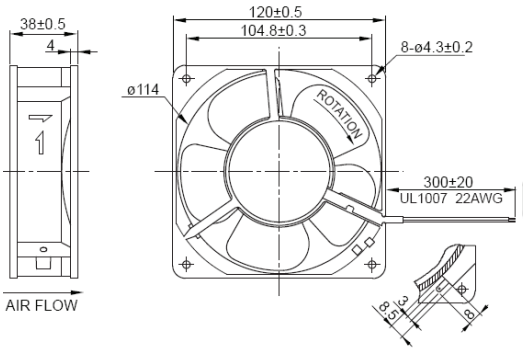

Terminal or Lead Wire Type

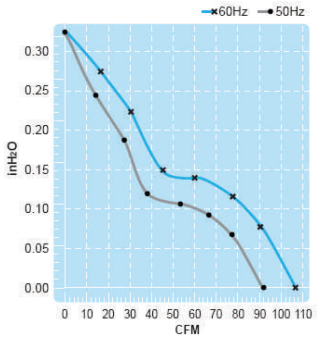

E314708 E314708

Model Spec	Rated Voltage V	Frequency Hz	Input Power W	Rated Current A	Locked Current A	Speed RPM	Maximum Air Flow m³/ min	Maximum Air Flow CFM	Maximum Pressure mmH₂O	Maximum Pressure InchH₂O	Noise dB	Weight KG
EA1238-11HB	115V	50	14	0.20	0.27	2,700	2.6	92	8.0	0.32	42	0.53
		60	12	0.16	0.23	3,100	3.0	106	8.0	0.32	46	
EA1238-23HB	230V	50	17	0.10	0.14	2,700	2.6	92	8.0	0.32	42	0.53
		60	15	0.08	0.12	3,100	3.0	106	8.0	0.32	46	
EA1238-11MB	115V	50	14	0.18	0.20	2,500	2.4	85	6.5	0.26	40	0.53
		60	12	0.17	0.19	2,750	2.6	92	7.0	0.28	42	
EA1238-23MB	230V	50	17	0.09	0.10	2,500	2.4	85	6.5	0.26	40	0.53
		60	15	0.08	0.09	2,750	2.6	92	7.0	0.28	42	
EA1238-11LB	115V	50	14	0.16	0.18	2,100	2.1	75	4.0	0.16	36	0.53
		60	12	0.15	0.16	2,300	2.3	82	4.1	0.16	38	
EA1238-23LB	230V	50	17	0.08	0.09	2,100	2.1	75	4.0	0.16	36	0.53
		60	15	0.07	0.08	2,300	2.3	82	4.1	0.16	38	

MODEL: EA1238M SERIES (Avaliable also in Double Voltage)

• Metal Impeller

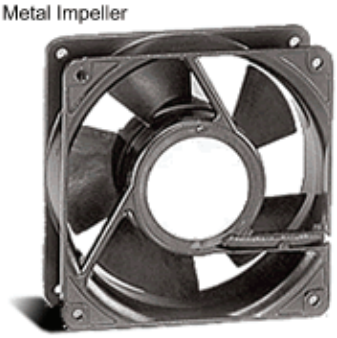

Impedance Protection

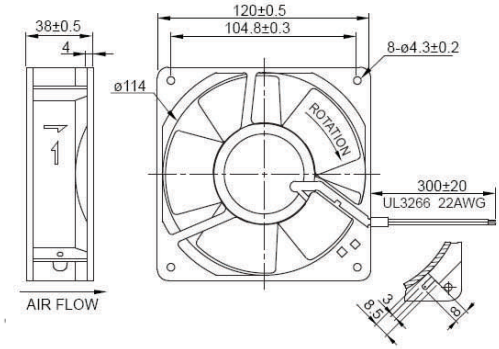

Terminal or Lead Wire Type

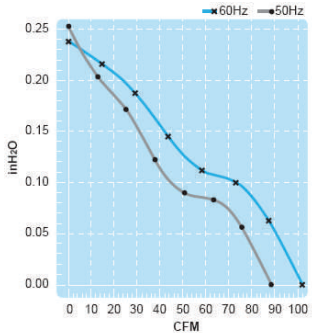

E314708 E314708

Model Spec	Rated Voltage V	Frequency Hz	Input Power W	Rated Current A	Locked Current A	Speed RPM	Maximum Air Flow m³/ min	Maximum Air Flow CFM	Maximum Pressure mmH₂O	Maximum Pressure InchH₂O	Noise dB	Weight KG
EA1238M-11HB	115V	50	15	0.17	0.25	2,700	2.5	89	6.5	0.26	42	0.55
		60	13	0.15	0.22	3,100	2.9	103	6.0	0.24	46	
EA1238M-23HB	230V	50	17	0.10	0.13	2,700	2.5	89	6.5	0.26	42	0.55
		60	15	0.09	0.12	3,100	2.9	103	6.0	0.24	46	

Electronic Alliance

AC TUBE AXIAL FANS

MODEL: EA1225R SERIES
SIZE: 120 X 120 X 25 MM

Impedance Protection

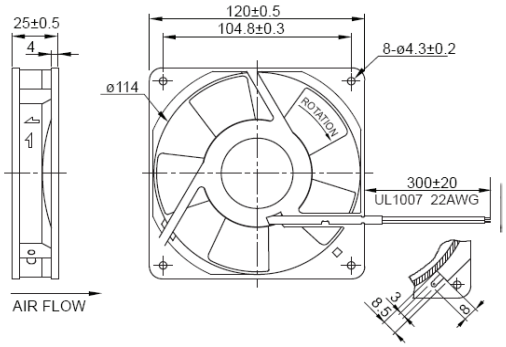

Terminal or Lead Wire Type

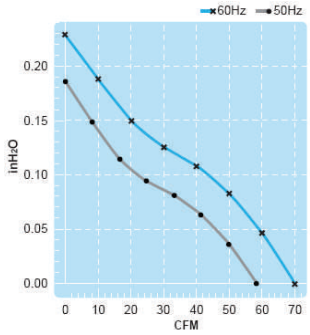

Model Spec	Rated Voltage V	Frequency Hz	Input Power W	Rated Current A	Locked Current A	Speed RPM	Maximum Air Flow m³/ min	Maximum Air Flow CFM	Maximum Pressure mmH₂O	Maximum Pressure InchH₂O	Noise dB	Weight KG
EA1225R-11HB	115V	50	14	0.15	0.16	2,400	1.7	60	4.5	0.18	38	0.33
		60	11	0.12	0.15	2,900	2.0	70	5.4	0.21	42	
EA1225R-23HB	230V	50	16	0.08	0.09	2,400	1.7	60	4.5	0.18	38	0.33
		60	14	0.07	0.08	2,900	2.0	70	5.4	0.21	42	

MODEL: EA1225 SERIES (Available also in High Speed, Ball Bearing, Double Voltage and Sleeve bearing Option)
SIZE: 120 X 120 X 25 MM

Impedance Protection

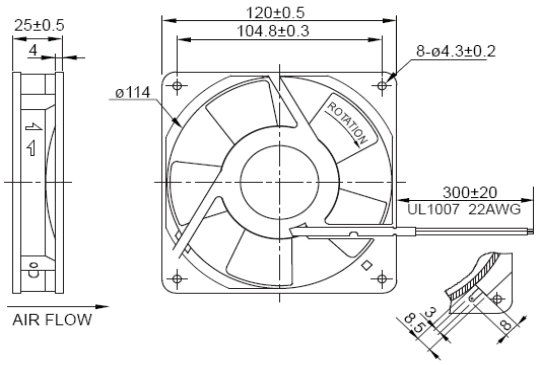

Terminal or Lead Wire Type

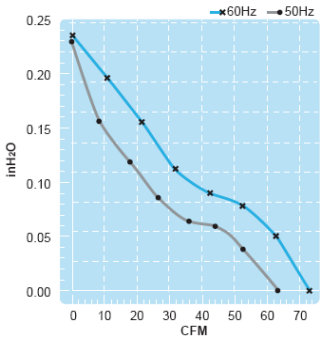

E314708 E314708

Model Spec	Rated Voltage V	Frequency Hz	Input Power W	Rated Current A	Locked Current A	Speed RPM	Maximum Air Flow m³/ min	Maximum Air Flow CFM	Maximum Pressure mmH₂O	Maximum Pressure InchH₂O	Noise dB	Weight KG
EA1225-11HB / HS	115V	50	14	0.15	0.16	2,400	1.8	64	5.3	0.21	38	0.33
		60	11	0.12	0.15	2,900	2.1	75	5.4	0.21	42	
EA1225-23HB / HS	230V	50	16	0.08	0.09	2,400	1.8	64	5.3	0.21	38	0.33
		60	14	0.07	0.08	2,900	2.1	75	5.4	0.21	42	
EA1225-11LB / LS	115V	50	14	0.14	0.15	1,600	1.3	46	2.4	0.09	31	0.33
		60	11	0.11	0.12	2,000	1.5	53	2.9	0.11	33	
EA1225-23LB / LS	230V	50	16	0.07	0.08	1,600	1.3	46	2.4	0.09	31	0.33
		60	14	0.06	0.07	2,000	1.5	53	2.9	0.11	33	

MODEL: EA9238M SERIES
SIZE: 92 X 92 X 38 MM

• Metal Impeller

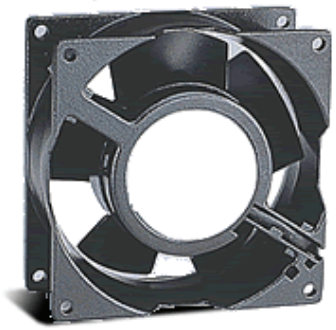

Impedance Protection

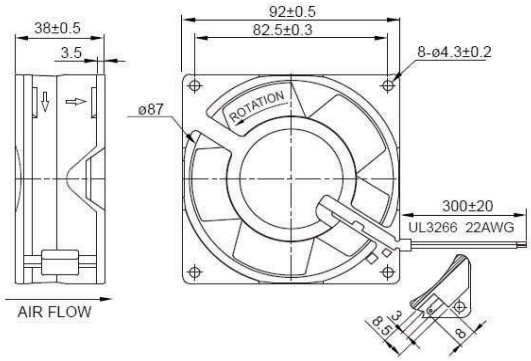

Terminal or Lead Wire Type

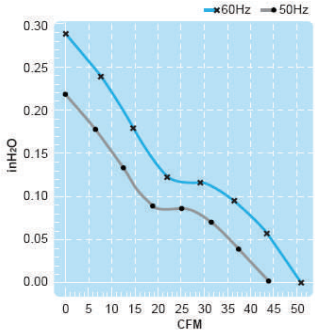

E314708 E314708

Model Spec	Rated Voltage V	Frequency Hz	Input Power W	Rated Current A	Locked Current A	Speed RPM	Maximum Air Flow m³/ min	Maximum Air Flow CFM	Maximum Pressure mmH₂O	Maximum Pressure InchH₂O	Noise dB	Weight KG
EA9238M-11HB	115V	50	12	0.14	0.19	2,700	1.25	44	6.0	0.24	37	0.43
		60	11	0.12	0.17	3,200	1.45	51	7.5	0.30	42	
EA9238M-23HB	230V	50	12	0.09	0.09	2,700	1.25	44	6.0	0.24	37	0.43
		60	11	0.06	0.08	3,200	1.45	51	7.5	0.30	42	

MODEL: EA9225 SERIES (Available also in High Speed, Ball Bearing, Double Voltage and Sleeve bearing Option)
SIZE: 92X 92 X 25 MM

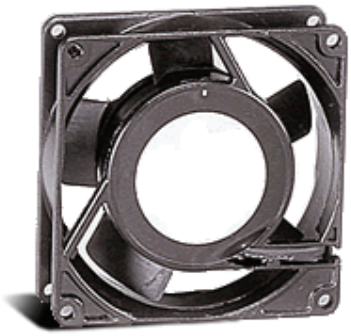

Impedance Protection

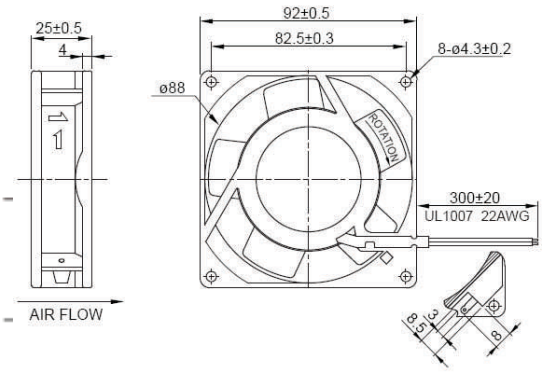

Terminal or Lead Wire Type

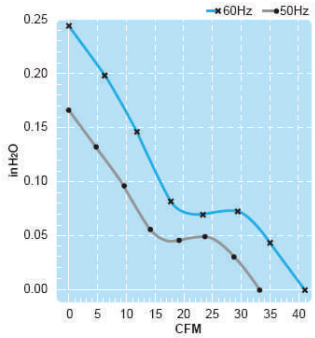

E314708 E314708

Model Spec	Rated Voltage V	Frequency Hz	Input Power W	Rated Current A	Locked Current A	Speed RPM	Maximum Air Flow m³/ min	Maximum Air Flow CFM	Maximum Pressure mmH₂O	Maximum Pressure InchH₂O	Noise dB	Weight KG
EA9225-11HB / HS	115V	50	14	0.15	0.16	2,500	0.93	33	4.5	0.18	32	0.28
		60	11	0.12	0.13	3,000	1.13	40	6.5	0.26	36	
EA9225-23HB / HS	230V	50	16	0.08	0.09	2,500	0.93	33	4.5	0.18	32	0.28
		60	14	0.07	0.08	3,000	1.13	40	6.5	0.26	36	
EA9225-11LB / LS	115V	50	14	0.14	0.15	1,800	0.55	20	2.5	0.10	28	0.28
		60	11	0.11	0.12	2,300	0.70	25	4.0	0.16	32	
EA9225-23LB / LS	230V	50	16	0.70	0.08	1,800	0.55	20	2.5	0.10	28	0.28
		60	14	0.06	0.07	2,300	0.70	25	4.0	0.16	32	

MODEL: EA8038 SERIES (Available also in High Speed, Ball Bearing, Double Voltage and Sleeve bearing Option)
SIZE: 80X 80 X 38 MM

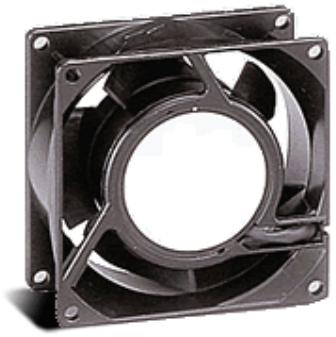

Impedance Protection

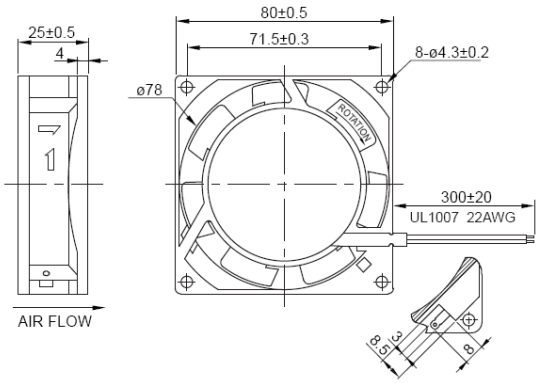

Terminal or Lead Wire Type

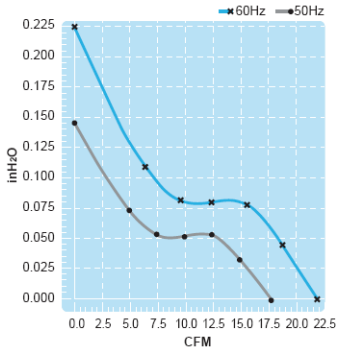

E314708 E314708

Model Spec	Rated Voltage V	Frequency Hz	Input Power W	Rated Current A	Locked Current A	Speed RPM	Maximum Air Flow m³/ min	Maximum Air Flow CFM	Maximum Pressure mmH₂O	Maximum Pressure InchH₂O	Noise dB	Weight KG
EA8038-11HB / HS	115V	50	12	0.14	0.15	2,500	0.68	24	4.0	0.16	32	0.28
		60	9	0.12	0.13	3,000	0.83	30	5.5	0.22	36	
EA8038-23HB / HS	230V	50	14	0.07	0.08	2,500	0.68	24	4.0	0.16	32	0.28
		60	12	0.06	0.07	300	0.83	30	5.5	0.22	36	
EA8038-11LB /LS	115V	50	12	0.12	0.13	1,900	0.55	20	2.5	0.10	28	0.28
		60	9	0.10	0.11	2,400	0.70	25	4.0	0.16	32	
EA8038-23LB /LS	230V	50	14	0.06	0.07	1,900	0.55	20	2.5	0.10	28	0.28
		60	12	0.05	0.06	2,400	0.70	25	4.0	0.16	32	

MODEL: EA8025 SERIES (Available also in High Speed, Ball Bearing, Double Voltage and Sleeve bearing Option)
SIZE: 80 X 80 X 25 MM

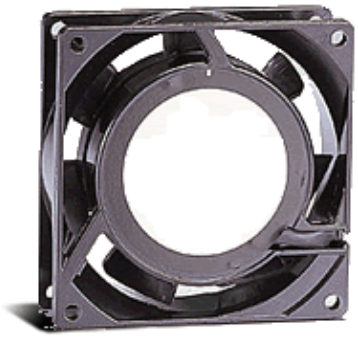

Impedance Protection

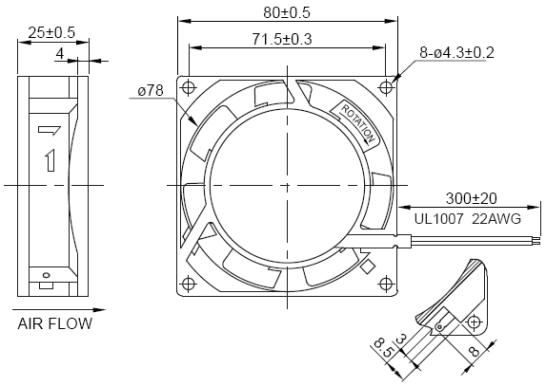

Terminal or Lead Wire Type

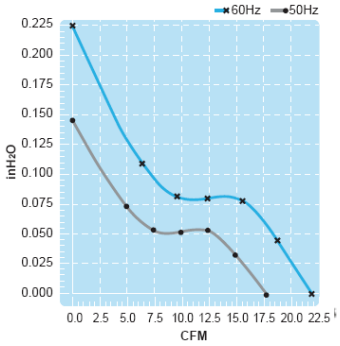

E314708 E314708

Model Spec	Rated Voltage V	Frequency Hz	Input Power W	Rated Current A	Locked Current A	Speed RPM	Maximum Air Flow m³/ min	Maximum Air Flow CFM	Maximum Pressure mmH₂O	Maximum Pressure InchH₂O	Noise dB	Weight KG
EA8025-11HB / HS	115V	50	14	0.15	0.16	2,600	0.59	21	4.0	0.16	32	0.26
		60	11	0.12	0.13	3,100	0.68	24	5.5	0.22	35	
EA8025-23HB / HS	230V	50	16	0.08	0.09	2,600	0.59	21	4.0	0.16	32	0.26
		60	14	0.07	0.08	3,100	0.68	24	5.5	0.22	35	
EA8025-11LB / LS	115V	50	14	0.14	0.15	1,900	0.40	15	2.0	0.08	28	0.26
		60	11	0.12	0.13	2,400	0.50	18	3.5	0.14	31	
EA8025-23LB / LS	230V	50	16	0.07	0.08	1,900	0.40	15	2.0	0.08	28	0.26
		60	14	0.06	0.07	2,400	0.50	18	3.5	0.14	31	

Electronic Alliance

AC TUBE AXIAL FANS

MODEL: EA6030 SERIES

SIZE: 60 X 60 X 30 MM

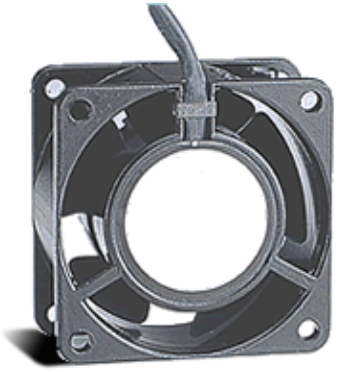

Impedance Protection

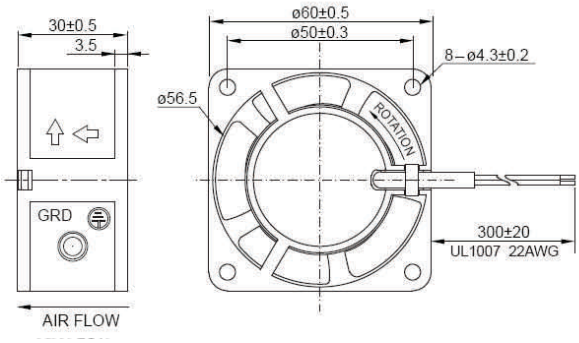

Lead Wire Type

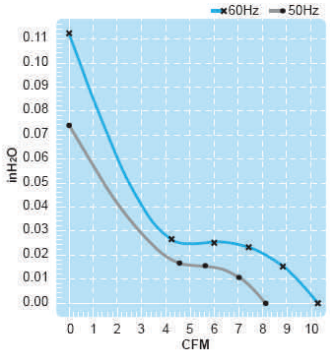

E314708 E314708

Model Spec	Rated Voltage V	Frequency Hz	Input Power W	Rated Current A	Locked Current A	Speed RPM	Maximum Air Flow m³/ min	Maximum Air Flow CFM	Maximum Pressure mmH₂O	Maximum Pressure InchH₂O	Noise dB	Weight KG
EA6030-11HB	115V	50	5	0.042	0.042	2,400	0.23	8.10	1.8	0.07	27	0.14
		60	4	0.035	0.040	3,000	0.29	10.24	2.8	0.11	28	
EA6030-23HB	230V	50	5	0.022	0.022	2,400	0.23	8.10	1.8	0.07	27	0.14
		60	4	0.016	0.020	3,000	0.29	10.24	2.8	0.11	28	